Work Order ID 66600

Tuesday, February 22, 2011 1:29:21 PM

Item ID: D350-600-242 **Accept** **Setup Start**

Revision ID: **Stop**

Item Name: Spacepod, RH, AS350/355

Start Date: 2/22/2011 **Start Qty:** 1.00 **Cust Item ID:**

Required Date: 2/25/2011 **Req'd Qty:** 1.00 **Customer:**

Reference:

Approvals: **Process Plan:** M **Date:** 11-02-22 **Tooling:** _____ **Date:** _____ **Run Start**

QC: _____ **Date:** _____ **SPC (Y/N):** _____ **Date:** _____ **Stop**

Sequence ID/ Work Center ID	Operation Description	Set Up/ Run Hours	Tool ID	Tool #	Plan Code	Accept Qty	Reject Qty	Reject Number	Insp. Stamp
Draw Nbr	**Revision Nbr**								
IIN D350-600	Rev C								
100	DOCUMENT CONTROL	0.00							
DC	**Memo**	0.00							
Document Control	Photocopy bluefile and type labels as per PPP D350-600-242 CHG001								
110	Small Fab	0.00							
Small Fab	**Memo**	0.00							
Small Fab	1-Drill holes in D3188-2 using drill jig DT8971 2-Open holes in D3188-2 body floor to Ø0.297" as per dwg D3188 3-Deburr 4-Install inserts in D3188-2 as per Dwg D3188.								
120	QC5- Inspect part completeness to step on W/O	0.00							
QC	**Memo**	0.00							
Quality Control									

DC: 11 04 15 (1) Par BG 11-4-12

Small Fab: 11-04-05 PIO

QC: Sulorlde (2)

Dart Aerospace Ltd

W/O: 66600		WORK ORDER CHANGES					
DATE	STEP	PROCEDURE CHANGE	By	Date	Qty	Approval Chief Eng / Prod Mgr	Approval QC Inspector
11-04-05	110	use Hysol 9309.3 ~~epoxy~~ epoxy instead of Hysol 934 & for potting holes as per dwg 3188 section I-I				11.04.05 PER QS1037	

Part No: D350-600-242 PAR #: _____ Fault Category: _____ NCR: Yes No DQA: _____ Date: _____

Resolution: _____ Disposition: _____ QA: N/C Closed: _____ Date: _____

NCR:		WORK ORDER NON-CONFORMANCE (NCR)						
DATE	STEP	Description of NC Section A	Corrective Action Section B			Verification Section C	Approval Chief Eng	Approval QC Inspector
			Initial Chief Eng	Action Description Chief Eng	Sign & Date			

NOTE: Date & initial all entries

Work Order ID 66600

Tuesday, February 22, 2011 1:29:21 PM

Item ID: D350-600-242 **Accept** **Setup Start**

Revision ID: **Stop**

Item Name: Spacepod, RH, AS350/355

Start Date: 2/22/2011 **Start Qty:** 1.00 **Cust Item ID:**

Required Date: 2/25/2011 **Req'd Qty:** 1.00 **Customer:**

Reference:

Run Start

Approvals: **Process Plan:** _____ **Date:** _____ **Tooling:** _____ **Date:** _____

Stop

QC: _____ **Date:** _____ **SPC (Y/N):** _____ **Date:** _____

Sequence ID/ Work Center ID	Operation Description	Set Up/ Run Hours	Tool ID	Tool #	Plan Code	Accept Qty	Reject Qty	Reject Number	Insp. Stamp
130	Small Fab	0.00							
Small Fab									
Small Fab	**Memo**	0.00							
	1-Cut D2986 Neoprene Foam per template D298611 2- Adhere D2986 foam to bottom side of D3187-2 spacepod floor using contact adhesive A/R Batch: _____	N/A already installed as per B# 59241							
140	Small Fab	0.00							
Small Fab									
Small Fab	**Memo**	0.00							
	****This step seperates hardware, previous steps is for body & floor****								

Dart Aerospace Ltd

W/O:		WORK ORDER CHANGES					
DATE	STEP	PROCEDURE CHANGE	By	Date	Qty	Approval Chief Eng / Prod Mgr	Approval QC Inspector

Part No: _____ **PAR #:** _____ **Fault Category:** _____ **NCR:** Yes No **DQA:** _____ **Date:** _____

Resolution: _____ **Disposition:** _____ **QA: N/C Closed:** _____ **Date:** _____

NCR:		WORK ORDER NON-CONFORMANCE (NCR)						
DATE	STEP	Description of NC Section A	Corrective Action Section B			Verification Section C	Approval Chief Eng	Approval QC Inspector
			Initial Chief Eng	Action Description Chief Eng	Sign & Date			

NOTE: Date & initial all entries

Work Order ID 66600

Tuesday, February 22, 2011 1:29:21 PM

Item ID: D350-600-242 **Accept** **Setup Start**

Revision ID: **Stop**

Item Name: Spacepod, RH, AS350/355

Start Date: 2/22/2011 **Start Qty:** 1.00 **Cust Item ID:**

Required Date: 2/25/2011 **Req'd Qty:** 1.00 **Customer:**

Reference:

Approvals: **Process Plan:** _____ **Date:** _____ **Tooling:** _____ **Date:** _____ **Run Start**

QC: _____ **Date:** _____ **SPC (Y/N):** _____ **Date:** _____ **Stop**

Sequence ID/ Work Center ID	Operation Description	Set Up/ Run Hours	Tool ID	Tool #	Plan Code	Accept Qty	Reject Qty	Reject Number	Insp. Stamp
150		0.00							
Small Fab	Small Fab								
Small Fab	**Memo**	0.00							
Small Fab	Assemble D3186-4 door with D3188-2 body as per Dwg ICA-D350-600 ***Hardware on previous steps is for door ass'y**** 1-Drill and plug section I-I and J-J of dwg D3188 p.11 using Hysol ~~934NA~~ 9309.3 as per Pto @ step 110 with milled fibres 10% to weight. Install insert. A/R Hysol batch: 115680 expire date: 2011/09 A/R Milled fibres batch: 100859 2- Prime (grey) as necessary per QSI005 Primer batch: 116563 Hardner batch: 116563 3-Attach Neoprene Foam to floor using Contact Cement → N/A already installed as per B# 59241 A/R Contact Cement Batch: _____								
170	QC5- Inspect part completeness to step on W/O	0.00							
QC-	**Memo**	0.00							
Quality Control									

Dart Aerospace Ltd

W/O:		WORK ORDER CHANGES					
DATE	STEP	PROCEDURE CHANGE	By	Date	Qty	Approval Chief Eng / Prod Mgr	Approval QC Inspector

Part No: _____ **PAR #:** _____ **Fault Category:** _____ **NCR:** Yes No **DQA:** _____ **Date:** _____

Resolution: _____ **Disposition:** _____ **QA: N/C Closed:** _____ **Date:** _____

NCR:		WORK ORDER NON-CONFORMANCE (NCR)						
DATE	STEP	Description of NC Section A	Corrective Action Section B			Verification Section C	Approval Chief Eng	Approval QC Inspector
			Initial Chief Eng	Action Description Chief Eng	Sign & Date			

NOTE: Date & initial all entries

H:\fFORMS\Quality Assurance\approved QA\NCRWO RevE

Work Order ID 66600

Tuesday, February 22, 2011 1:29:21 PM

Item ID: D350-600-242 **Accept** **Setup Start**

Revision ID: **Stop**

Item Name: Spacepod, RH, AS350/355

Start Date: 2/22/2011 **Start Qty:** 1.00 **Cust Item ID:**

Required Date: 2/25/2011 **Req'd Qty:** 1.00 **Customer:**

Reference:

Run Start

Approvals: **Process Plan:** _____ **Date:** _____ **Tooling:** _____ **Date:** _____

Stop

QC: _____ **Date:** _____ **SPC (Y/N):** _____ **Date:** _____

Sequence ID/ Work Center ID	Operation Description	Set Up/ Run Hours	Tool ID	Tool #	Plan Code	Accept Qty	Reject Qty	Reject Number	Insp. Stamp
180	Wing Walk as per dwg QSI005 4.4 Batch 117315	0.00							
HandFinish						ZT	11-04-07		
	Memo	0.00							
Hand Finishing	Wing Walk Spacepod top surface of Pod as per Dwg D3188								
190	QC3- Inspect Part Finish	0.00							
QC						1	ϕ	11/04/07	
	Memo	0.00							
Quality Control									
200	Pick Kit	0.00							
Packaging						11/4/11			
	Memo	0.00							
Packaging									

Dart Aerospace Ltd

W/O:		WORK ORDER CHANGES					
DATE	STEP	PROCEDURE CHANGE	By	Date	Qty	Approval Chief Eng / Prod Mgr	Approval QC Inspector

Part No: _____ **PAR #:** _____ **Fault Category:** _____ **NCR:** Yes No **DQA:** _____ **Date:** _____

Resolution: _____ **Disposition:** _____ **QA: N/C Closed:** _____ **Date:** _____

NCR:		WORK ORDER NON-CONFORMANCE (NCR)						
DATE	STEP	Description of NC Section A	Corrective Action Section B			Verification Section C	Approval Chief Eng	Approval QC Inspector
			Initial Chief Eng	Action Description Chief Eng	Sign & Date			

NOTE: Date & initial all entries

H:\fFORMS\Quality Assurance\approved QA\NCRWO RevE

Work Order ID 66600

Tuesday, February 22, 2011 1:29:21 PM

Item ID: D350-600-242 **Accept** **Setup Start** **Stop**

Revision ID:

Item Name: Spacepod, RH, AS350/355

Start Date: 2/22/2011 **Start Qty:** 1.00 **Cust Item ID:**

Required Date: 2/25/2011 **Req'd Qty:** 1.00 **Customer:**

Reference:

Run Start **Stop**

Approvals: **Process Plan:** _____ **Date:** _____ **Tooling:** _____ **Date:** _____

QC: _____ **Date:** _____ **SPC (Y/N):** _____ **Date:** _____

Sequence ID/ Work Center ID	Operation Description	Set Up/ Run Hours	Tool ID	Tool #	Plan Code	Accept Qty	Reject Qty	Reject Number	Insp. Stamp
210	QC4- 100% Inspect kits for completeness	0.00							
QC	**Memo**	0.00					11	04	15 (1)
Quality Control									
220	Packaging	0.00							
Packaging	**Memo**	0.00				11/4/19			
Packaging	Identify and pack for shipping as per PPP D350-600-242 Location:_____ PPP Rev: B								
230	QC21- Final Inspection - Work Order Release	0.00							
QC	**Memo**	0.00						11/4/19	
Quality Control									

MF
11-04-19

Dart Aerospace Ltd

W/O:		WORK ORDER CHANGES					
DATE	STEP	PROCEDURE CHANGE	By	Date	Qty	Approval Chief Eng / Prod Mgr	Approval QC Inspector

Part No: _____ **PAR #:** _____ **Fault Category:** _____ **NCR:** Yes No **DQA:** _____ **Date:** _____

Resolution: _____ **Disposition:** _____ **QA: N/C Closed:** _____ **Date:** _____

NCR:		WORK ORDER NON-CONFORMANCE (NCR)						
DATE	STEP	Description of NC Section A	Corrective Action Section B			Verification Section C	Approval Chief Eng	Approval QC Inspector
			Initial Chief Eng	Action Description Chief Eng	Sign & Date			

NOTE: Date & initial all entries

H:\fFORMS\Quality Assurance\approved QA\NCRWO RevE

Picklist Print

Tuesday, February 22, 2011 1:29:33 PM

Work Order ID: 66600

Parent Item: D350-600-242

Parent Item Name: Spacepod, RH, AS350/355

Start Date: 2/22/2011 **Required Date:** 2/25/2011

Start Qty: 1.00 **Required Qty:** 1.00

Comments: IPP Rev:A□07.03.07 new issue EC
IPP rev B 07.04.16 reformat, D3188 rev.E EC
IPP Rev:C 08-09-30 add primer in step 44 DD verified by:EC IPP Rev:D
add install insert seq150 DD 10.03.15 verified by:EC IPP Rev:E remove
D3188-2m add D3188-6 DD 10.04.07 verified by:JLM

Component Item ID/ Item Name	Replacement Item ID	Mfg/ Purch	Bin Item	Primary Location	Last Location	Route Seq ID	Unit of Measure	Qty on Hand	Qty per Kit	Total Qty	Qty Issued	Date Issued	Status
D3188-6		Manufactured	No			110	Each	0.0000	1	1			
Spacepod Body					66598					RT	11-04-04		
D3015-3		Manufactured	No			130	Each	234.0000	1	1			
Locknut										RT	11-04-05		
				Location			**Loc Qty**		**Loc Code**				
				ST030			225						
					64275		25			x1			
					66114		200						
				ST033			9						
					60287		9						
AN526C832R24		Purchased	No			140	Each	70.0000	4	4			
screw										RT	11-04-05		
				Location			**Loc Qty**		**Loc Code**				
				ST325			15						
					115518		15						
				ST327			55						
					110179		5			x4			
					116556		50						

Dart Aerospace Ltd

W/O:		WORK ORDER CHANGES					
DATE	STEP	PROCEDURE CHANGE	By	Date	Qty	Approval Chief Eng / Prod Mgr	Approval QC Inspector

Part No: _____ **PAR #:** _____ **Fault Category:** _____ **NCR:** Yes No **DQA:** _____ **Date:** _____

Resolution: _____ **Disposition:** _____ **QA: N/C Closed:** _____ **Date:** _____

NCR:		WORK ORDER NON-CONFORMANCE (NCR)						
DATE	STEP	Description of NC Section A	Corrective Action Section B			Verification Section C	Approval Chief Eng	Approval QC Inspector
			Initial Chief Eng	Action Description Chief Eng	Sign & Date			

NOTE: Date & initial all entries

Picklist Print

Tuesday, February 22, 2011 1:29:33 PM

Work Order ID: 66600

Parent Item: D350-600-242

Parent Item Name: Spacepod, RH, AS350/355

Start Date: 2/22/2011 **Required Date:** 2/25/2011

Start Qty: 1.00 **Required Qty:** 1.00

AN960JD516	NAS1149D0563J	Purchased	No	140	Each	34.0000	1	1	
Washer									116702 x1 ET 11-04-05

Location	Loc Qty	Loc Code
ST	34	
103694	18	
107534	12	
109287	4	

AN960JD8	NAS1149DN832J	Purchased	No	140	Each	10.0000	20	20	
Washer									in 117316 ET 11-04-06

Location	Loc Qty	Loc Code
ST347	10	
105059	10	

D2179		Manufactured	No	140	Each	42.0000	2	2	
Doubler									ET 11-04-05

Location	Loc Qty	Loc Code
ST007	42	
35432	42	x2

D2237		Manufactured	No	140	Each	31.0000	2	2	
Striker Plate									ET 11-04-05

Location	Loc Qty	Loc Code
ST009	31	
64426	3	
64762	28	x2

D2986		Manufactured	No	140	sf	0.0000	5.62	5.915789	
Black Neoprene Foam .125	N/A already installed as per B# 59241								

Dart Aerospace Ltd

W/O:		WORK ORDER CHANGES					
DATE	STEP	PROCEDURE CHANGE	By	Date	Qty	Approval Chief Eng / Prod Mgr	Approval QC Inspector

Part No: _____ **PAR #:** _____ **Fault Category:** _____ **NCR:** Yes No **DQA:** _____ **Date:** _____

Resolution: _____ **Disposition:** _____ **QA: N/C Closed:** _____ **Date:** _____

NCR:		WORK ORDER NON-CONFORMANCE (NCR)						
DATE	STEP	Description of NC Section A	Corrective Action Section B			Verification Section C	Approval Chief Eng	Approval QC Inspector
			Initial Chief Eng	Action Description Chief Eng	Sign & Date			

NOTE: Date & initial all entries

H:\fFORMS\Quality Assurance\approved QA\NCRWO RevE

Picklist Print

Tuesday, February 22, 2011 1:29:34 PM

Work Order ID: 66600

Parent Item: D350-600-242

Parent Item Name: Spacepod, RH, AS350/355

Start Date: 2/22/2011 **Required Date:** 2/25/2011

Start Qty: 1.00 **Required Qty:** 1.00

D3538-1	Manufactured	No	140	Each	0.0000	2	2	
Hinge Bracket			66018					TT 11 04 05
D3554-7	Manufactured	No	140	Each	17.0000	1	1	
Ball Stud								TT 11-04-05

Location	Loc Qty	Loc Code	
ST067	10		
65123	10		
ST070	7		
37674	7		x 1

D3567-2	Manufactured	No	140	Each	23.0000	1	1	
Decal								TT 11-04-05

Location	Loc Qty	Loc Code	
ST070	23		
39678	4		x 1
50375	19		

MS20426AD4-5	Purchased	No	140	Each	5,517.000	4	4	
Rivet								TT 11-04-05

Location	Loc Qty	Loc Code	
ST317	5517		
6733	535		
6874	4982		x 4

Dart Aerospace Ltd

W/O:		WORK ORDER CHANGES					
DATE	STEP	PROCEDURE CHANGE	By	Date	Qty	Approval Chief Eng / Prod Mgr	Approval QC Inspector

Part No: _____ **PAR #:** _____ **Fault Category:** _____ **NCR:** Yes No **DQA:** _____ **Date:** _____

Resolution: _____ **Disposition:** _____ **QA: N/C Closed:** _____ **Date:** _____

NCR:		WORK ORDER NON-CONFORMANCE (NCR)						
DATE	STEP	Description of NC Section A	Corrective Action Section B			Verification Section C	Approval Chief Eng	Approval QC Inspector
			Initial Chief Eng	Action Description Chief Eng	Sign & Date			

NOTE: Date & initial all entries

H:\fFORMS\Quality Assurance\approved QA\NCRWO RevE

Picklist Print

Tuesday, February 22, 2011 1:29:34 PM

Work Order ID: 66600

Parent Item: D350-600-242

Parent Item Name: Spacepod, RH, AS350/355

Start Date: 2/22/2011 **Required Date:** 2/25/2011

Start Qty: 1.00 **Required Qty:** 1.00

ALS4-1032-130	Purchased	No	150	Each	1,177.000	28	28	
Insert								116800 FT 11-04-06

Location		Loc Qty	Loc Code
PKG11		1042	
	114723	42	
	116864	1000	
ST282		96	
	110511	10	
	115911	86	
ST381		39	
	114654	39	

AN526C832R10	Purchased	No	150	Each	127.0000	10	10
Screw							FT 11-04-05

Location		Loc Qty	Loc Code
ST327		127	
	104603	3	
	114382	24	
	115101	100	x 10

AN526C832R14	Purchased	No	150	Each	512.0000	2	2
Screw							FT 11-04-05

Location		Loc Qty	Loc Code
ST327		512	
	104916	512	x2

Dart Aerospace Ltd

W/O:		WORK ORDER CHANGES					
DATE	STEP	PROCEDURE CHANGE	By	Date	Qty	Approval Chief Eng / Prod Mgr	Approval QC Inspector

Part No: _____ **PAR #:** _____ **Fault Category:** _____ **NCR:** Yes No **DQA:** _____ **Date:** _____

Resolution: _____ **Disposition:** _____ **QA: N/C Closed:** _____ **Date:** _____

NCR:		WORK ORDER NON-CONFORMANCE (NCR)						
DATE	STEP	Description of NC Section A	Corrective Action Section B			Verification Section C	Approval Chief Eng	Approval QC Inspector
			Initial Chief Eng	Action Description Chief Eng	Sign & Date			

NOTE: Date & initial all entries

H:\fFORMS\Quality Assurance\approved QA\NCRWO RevE

Picklist Print

Tuesday, February 22, 2011 1:29:34 PM

Work Order ID: 66600

Parent Item: D350-600-242

Parent Item Name: Spacepod, RH, AS350/355

Start Date: 2/22/2011 **Required Date:** 2/25/2011

Start Qty: 1.00 **Required Qty:** 1.00

AN960JD10	NAS1149D0363J	Purchased	No	150	Each	24.0000	2	2	
Washer									

116583

ST 11-04-05

Location		Loc Qty	Loc Code
ST		6	
	107715	6	
ST335		18	
	105792	2	
	112279	16	

D2228	Manufactured	No	150	Each	42.0000	4	4	
Bracket Plate								

ST 11-04-05

Location		Loc Qty	Loc Code
ST009		42	
	64427	42	

x 4

D2464	Manufactured	No	150	f	551.5734	10.8	11.36842	
3/4 Seal								

ST 11-04-06

Location		Loc Qty	Loc Code
ST402		54.4734	
	48173	54.4734	
ST404		497.1	
	61878	497.1	

x 10.8

D2585	Manufactured	No	150	Each	65.0000	2	2	
Mounting Channel								

ST 11-04-05

Location		Loc Qty	Loc Code
ST017		65	
	64761	23	
	66142	42	

x 1

x 1

Dart Aerospace Ltd

W/O:		WORK ORDER CHANGES					
DATE	STEP	PROCEDURE CHANGE	By	Date	Qty	Approval Chief Eng / Prod Mgr	Approval QC Inspector

Part No: _____ **PAR #:** _____ **Fault Category:** _____ **NCR:** Yes No **DQA:** _____ **Date:** _____

Resolution: _____ **Disposition:** _____ **QA: N/C Closed:** _____ **Date:** _____

NCR:		WORK ORDER NON-CONFORMANCE (NCR)						
DATE	STEP	Description of NC Section A	Corrective Action Section B			Verification Section C	Approval Chief Eng	Approval QC Inspector
			Initial Chief Eng	Action Description Chief Eng	Sign & Date			

NOTE: Date & initial all entries

H:\fFORMS\Quality Assurance\approved QA\NCRWO RevE

Picklist Print

Tuesday, February 22, 2011 1:29:35 PM

Work Order ID: 66600

Parent Item: D350-600-242

Parent Item Name: Spacepod, RH, AS350/355

Start Date: 2/22/2011 **Required Date:** 2/25/2011

Start Qty: 1.00 **Required Qty:** 1.00

D2586	Manufactured	No	150	Each	134.0000	2	2	BT 11-04-05
Door Latch								

Location	Loc Qty	Loc Code	
ST204	134		
64656	34		x2
64774	100		

D2621	Manufactured	No	150	Each	53.0000	2	2	BT 11-04-05
Latch Plate, 350 Spacepod								

Location	Loc Qty	Loc Code	
ST021	53		
46842	7		
56526	46		x2

D2857-1	Manufactured	No	150	Each	7.0000	1	1	BT 11-04-05
Hinge Bracket								

Location	Loc Qty	Loc Code	
ST026	7		
64435	7		x1

D2857-2	Manufactured	No	150	Each	17.0000	1	1	BT 11-04-05
Hinge Bracket								

Location	Loc Qty	Loc Code	
ST027	17		
64463	17		x1

Dart Aerospace Ltd

W/O:		WORK ORDER CHANGES					
DATE	STEP	PROCEDURE CHANGE	By	Date	Qty	Approval Chief Eng / Prod Mgr	Approval QC Inspector

Part No: _____ **PAR #:** _____ **Fault Category:** _____ **NCR:** Yes No **DQA:** _____ **Date:** _____

Resolution: _____ **Disposition:** _____ **QA: N/C Closed:** _____ **Date:** _____

NCR:		WORK ORDER NON-CONFORMANCE (NCR)						
DATE	STEP	Description of NC Section A	Corrective Action Section B			Verification Section C	Approval Chief Eng	Approval QC Inspector
			Initial Chief Eng	Action Description Chief Eng	Sign & Date			

NOTE: Date & initial all entries

H:\fFORMS\Quality Assurance\approved QA\NCRWO RevE

Picklist Print

Tuesday, February 22, 2011 1:29:35 PM

Work Order ID: 66600

Parent Item: D350-600-242

Parent Item Name: Spacepod, RH, AS350/355

Start Date: 2/22/2011 **Required Date:** 2/25/2011

Start Qty: 1.00 **Required Qty:** 1.00

D3557-1	Manufactured	No	150	Each	10.0000	1	1	
Bracket								11-04-05

Location	Loc Qty	Loc Code	
ST070	10		
64452	10		x1

MS21042L08	Purchased	No	150	Each	147.0000	18	18	
Nut								11-04-05

117087

Location	Loc Qty	Loc Code	
ST300	147		
116823	147		

MS21042L3	Purchased	No	150	Each	2,724.000	2	2	
Nut								11-04-05

Location	Loc Qty	Loc Code	
ST300	2724		
110844	4		
114784	9		
115835	211		
116391	900		x2
116540	800		
116549	800		

MS27039-08-11	Purchased	No	150	Each	49.0000	2	2	
Screw								11-04-05

Location	Loc Qty	Loc Code	
ST290	49		
116289	49		x2

Dart Aerospace Ltd

W/O:		WORK ORDER CHANGES					
DATE	STEP	PROCEDURE CHANGE	By	Date	Qty	Approval Chief Eng / Prod Mgr	Approval QC Inspector

Part No: _____ **PAR #:** _____ **Fault Category:** _____ **NCR:** Yes No **DQA:** _____ **Date:** _____

Resolution: _____ **Disposition:** _____ **QA: N/C Closed:** _____ **Date:** _____

NCR:		WORK ORDER NON-CONFORMANCE (NCR)						
DATE	STEP	Description of NC Section A	Corrective Action Section B			Verification Section C	Approval Chief Eng	Approval QC Inspector
			Initial Chief Eng	Action Description Chief Eng	Sign & Date			

NOTE: Date & initial all entries

H:\fFORMS\Quality Assurance\approved QA\NCRWO RevE

Picklist Print

Tuesday, February 22, 2011 1:29:35 PM

Work Order ID: 66600

Parent Item: D350-600-242

Parent Item Name: Spacepod, RH, AS350/355

Start Date: 2/22/2011 **Required Date:** 2/25/2011

Start Qty: 1.00 **Required Qty:** 1.00

MS27039-1-15	Purchased	No	150	Each	127.0000	2	2	ET 11-04-05
Screw								

Location	Loc Qty	Loc Code	
ST292	127		
114718	1		
116169	26		x2
116916	100		

NAS1515H3	Purchased	No	150	Each	150.0000	2	2	ET 11-04-05
Washer								

Location	Loc Qty	Loc Code	
ST277	150		
115935	50		x2
116373	100		

D350-600-449	Manufactured	No	200	Each	0.0000	1	1	B66736 11-04-14
Switch Relocation								
K10021	Manufactured	No	200	Each	0.0000	1	1	B67087 11/4/14
Spacepod Hardware Kit (-241)								
D3186-4	Manufactured	No	110	Each	0.0000	1	1	ET 11-04-04 ~~ET 11-04-04~~
Spacepod Door, RH								
D3187-2	Manufactured	No	110	Each	5.0000	1	1	ET 11-04-06
Spacepod Floor								

~~66575~~ 66595

Location	Loc Qty	Loc Code	
ST241B	5		
59241	4		x1
59579	1		

Dart Aerospace Ltd

W/O:		WORK ORDER CHANGES					
DATE	STEP	PROCEDURE CHANGE	By	Date	Qty	Approval Chief Eng / Prod Mgr	Approval QC Inspector

Part No: _____ **PAR #:** _____ **Fault Category:** _____ **NCR:** Yes No **DQA:** _____ **Date:** _____

Resolution: _____ **Disposition:** _____ **QA: N/C Closed:** _____ **Date:** _____

NCR:		WORK ORDER NON-CONFORMANCE (NCR)						
DATE	STEP	Description of NC Section A	Corrective Action Section B			Verification Section C	Approval Chief Eng	Approval QC Inspector
			Initial Chief Eng	Action Description Chief Eng.	Sign & Date			

NOTE: Date & initial all entries

H:\fFORMS\Quality Assurance\approved QA\NCRWO RevE

Picklist Print

Tuesday, February 22, 2011 1:29:36 PM

Work Order ID: 66600

Parent Item: D350-600-242

Parent Item Name: Spacepod, RH, AS350/355

Start Date: 2/22/2011 **Required Date:** 2/25/2011

Start Qty: 1.00 **Required Qty:** 1.00

A3235-020-935	Purchased	No	110	Each	425.0000	8	8	
Washer - Countersunk								

Location	Loc Qty	Loc Code
ST281	425	
106150	425	

11-04-06

X 8

Dart Aerospace Ltd

W/O:		WORK ORDER CHANGES					
DATE	STEP	PROCEDURE CHANGE	By	Date	Qty	Approval Chief Eng / Prod Mgr	Approval QC Inspector

Part No: _____ **PAR #:** _____ **Fault Category:** _____ **NCR:** Yes No **DQA:** _____ **Date:** _____

Resolution: _____ **Disposition:** _____ **QA: N/C Closed:** _____ **Date:** _____

NCR:		WORK ORDER NON-CONFORMANCE (NCR)						
DATE	STEP	Description of NC Section A	Corrective Action Section B			Verification Section C	Approval Chief Eng	Approval QC Inspector
			Initial Chief Eng	Action Description Chief Eng	Sign & Date			

NOTE: Date & initial all entries

H:\fFORMS\Quality Assurance\approved QA\NCRWO RevE

WO 66600

GENERAL NOTES:

1) MATERIALS:

RESIN: EPOCAST 50-A/9816 OR DERAKANE 470-36/411/510A40

FIBER: 9.7 oz 7781 WEAVE "S" GLASS (9 oz SATIN)
12 oz UNIDIRECTIONAL FIBERGLASS ("12 oz UNIDIRECTIONAL")
18 oz ROVING "E" GLASS (18 oz CLOTH)
OWENS CORNING MILLED FIBERS, "E" GLASS
3M K20 GLASS BUBBLES

FOAM: A500 CORE CELL
OR DIVINYCELL
OR AIREX
OR KLEGECELL
FILL VOIDS IN FOAM WITH PASTE MADE FROM MILLED FIBERS & RESIN

1. MOLD SHEDULE:

PART	LAYUP	TRIM AND DRILL
D3188-1M/-1/-5	DT8003	DT8501
D3188-2M/-2/-6	DT8004	DT8502
D3188-3M/-3/-7	DT8500	DT8501

2) FINISH: INSIDE/OUTSIDE WITH GREY DUPONT HIGHBUILD PRIMER 1144-S.
APPLY ANTI-SKID PAINT TO TOP SURFACE OF PODS PER QSI 005 4.4

3) TOLERANCES: PER DART QSI 018 UNLESS OTHERWISE NOTED

4) UNITS: INCHES UNLESS OTHERWISE NOTED

5) BREAK SHARP EDGES: 0.005 TO 0.010 MAX

6) IDENTIFICATION: NONE

7) WEIGHT: D3188-1 = N/A
D3188-2 = N/A
D3188-3 = N/A
D3188-5 = N/A
D3188-6 = N/A
D3188-7 = N/A

8) REFERENCE DIMENSIONS MATCH AIRCRAFT CONTOUR AND DOOR OPENING

9) LAMINATE PER DART QSI 006 LAMINATION SCHEDULE PER THIS DRAWING

RELEASED
2009 -10- 20

REV.	DESCRIPTION	BY	DATE
F	REORGANIZED VIEWS AND REFORMATTED DRAWING TO CURRENTS STANDARDS; ADD CHAMFER IN SECTIONS A-A (ZN C7-10) & H-H (ZN B7-11)	RF	09.07.13
E	ADD HYSOL/ FIBER OPTION ON SHEET 11	CB	07.04.02
D	UPDATE DIMENSIONS	LE	07.02.22
C	REMOVED D0600-XXX LABELS	LE	06.12.13
B	UPDATED DWG TO MATCH PRODUCT ADDED D3188-1M/-2M/-3M/-5/-6/-7	CB	06.10.06
A	NEW ISSUE	CP	03.04.03

DESIGN	JB	DART AEROSPACE LTD HAWKESBURY, ONTARIO, CANADA
DRAWN	RF	
CHECKED		DRAWING NO. REV. F
MFG. APPR.		D3188 SHEET 1 OF 11
APPROVED		TITLE SCALE
DE APPR.		SPACEPOD BODY NTS
DATE	09.07.13	

COPYRIGHT © 2003 BY DART AEROSPACE LTD
THIS DOCUMENT IS PRIVATE AND CONFIDENTIAL AND IS SUPPLIED ON THE EXPRESS CONDITION THAT IT IS NOT TO BE USED FOR ANY PURPOSE OR COPIED OR COMMUNICATED TO ANY OTHER PERSON WITHOUT WRITTEN PERMISSION FROM DART AEROSPACE LTD.

w/o 666 00

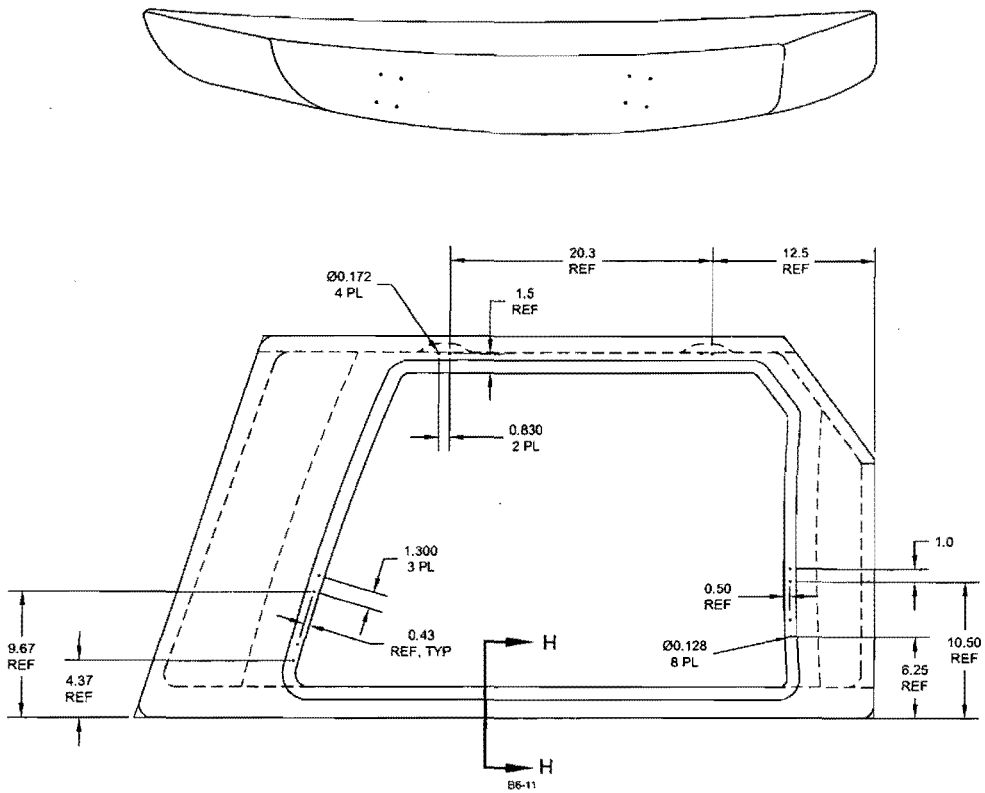

RELEASED
2009 -10- 20

D3188-1 SPACEPOD BODY
MAKE FROM D3188-1M

NOTES:
1) REFERENCE DIMENSIONS REPRESENT HOLES WHICH ARE TRANSFER DRILLED FROM D3186-1 DOOR DURING ASSEMBLY
2) SEE SHEET #11 FOR SECTION VIEW

DESIGN	JB	**DART AEROSPACE LTD** HAWKESBURY, ONTARIO, CANADA
DRAWN	RF	
CHECKED		DRAWING NO. REV. F
MFG. APPR.		D3188 SHEET 2 OF 11
APPROVED		TITLE SCALE
DE APPR.		SPACEPOD BODY NTS
DATE	09.07.13	

COPYRIGHT © 2003 BY DART AEROSPACE LTD
THIS DOCUMENT IS PRIVATE AND CONFIDENTIAL AND IS SUPPLIED ON THE EXPRESS CONDITION THAT IT IS NOT TO BE USED FOR ANY PURPOSE OR COPIED OR COMMUNICATED TO ANY OTHER PERSON WITHOUT WRITTEN PERMISSION FROM DART AEROSPACE LTD.

W/O 66600

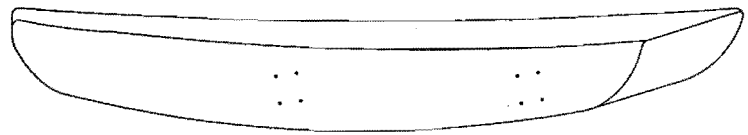

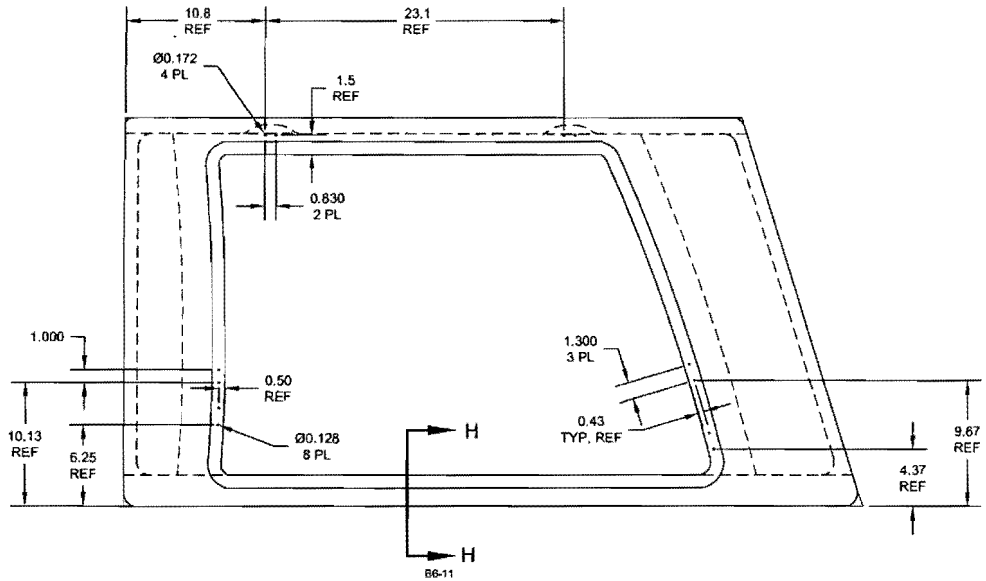

D3188-2 SPACEPOD BODY

MAKE FROM D3188-2M

RELEASED
2009 -10- 20

NOTES:
1) REFERENCE DIMENSIONS REPRESENT HOLES WHICH ARE TRANSFER DRILLED FROM D3186-2 DOOR DURING ASSEMBLY
2) SEE SHEET #11 FOR SECTION VIEW

DESIGN	JB	**DART AEROSPACE LTD** HAWKESBURY, ONTARIO, CANADA
DRAWN	RF	
CHECKED		DRAWING NO. REV. F
MFG. APPR.		D3188 SHEET 3 OF 11
APPROVED		TITLE SCALE
DE APPR.		SPACEPOD BODY NTS
DATE	09.07.13	

COPYRIGHT © 2003 BY DART AEROSPACE LTD
THIS DOCUMENT IS PRIVATE AND CONFIDENTIAL AND IS SUPPLIED ON THE EXPRESS CONDITION THAT IT IS NOT TO BE USED FOR ANY PURPOSE OR COPIED OR COMMUNICATED TO ANY OTHER PERSON WITHOUT WRITTEN PERMISSION FROM DART AEROSPACE LTD.

W/O 66600

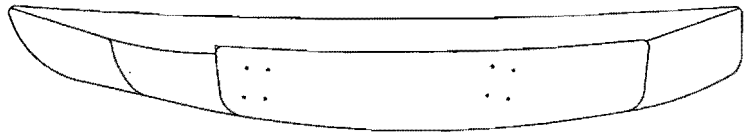

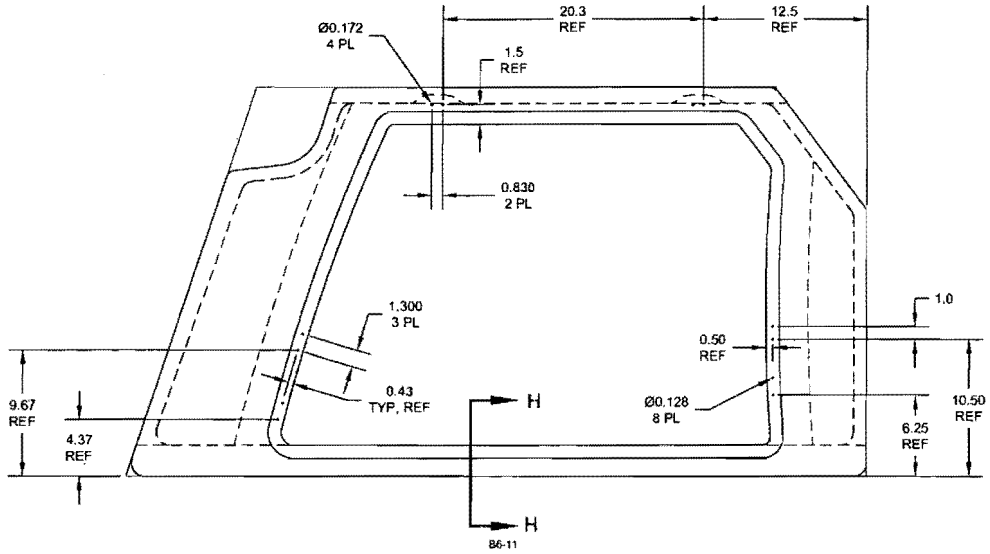

RELEASED
2009 -10- 20

D3188-3 SPACEPOD BODY
MAKE FROM D3188-3M

NOTES:
1) REFERENCE DIMENSIONS REPRESENT HOLES WHICH ARE TRANSFER DRILLED FROM D3186-1 DOOR DURING ASSEMBLY
2) SEE SHEET #11 FOR SECTION VIEW

DESIGN	JB	**DART AEROSPACE LTD** HAWKESBURY, ONTARIO, CANADA
DRAWN	RF	
CHECKED		DRAWING NO. REV. F
MFG. APPR.		D3188 SHEET 4 OF 11
APPROVED		TITLE SCALE
DE APPR.		SPACEPOD BODY NTS
DATE	09.07.13	

COPYRIGHT © 2003 BY DART AEROSPACE LTD
THIS DOCUMENT IS PRIVATE AND CONFIDENTIAL AND IS SUPPLIED ON THE EXPRESS CONDITION THAT IT IS NOT TO BE USED FOR ANY PURPOSE OR COPIED OR COMMUNICATED TO ANY OTHER PERSON WITHOUT WRITTEN PERMISSION FROM DART AEROSPACE LTD.

w/o 66600

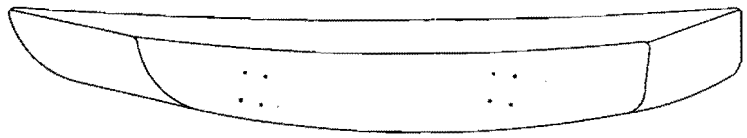

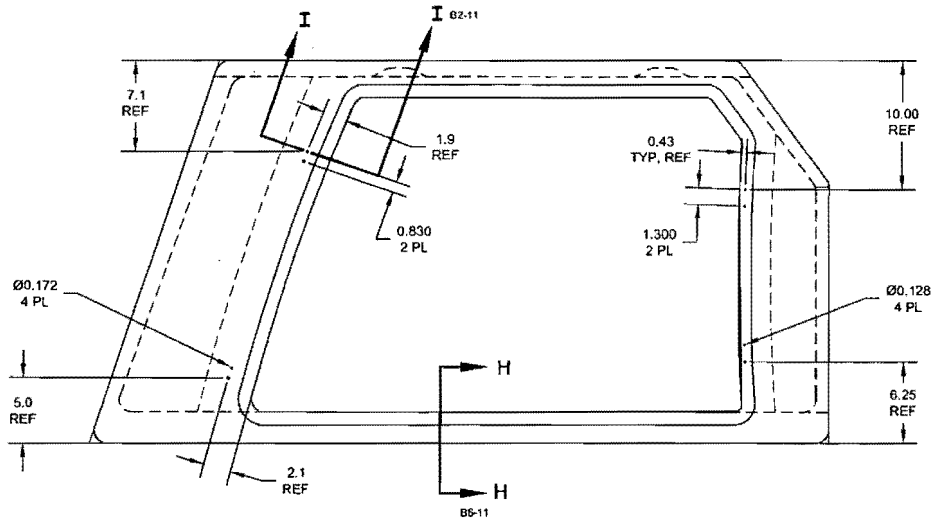

D3188-5 SPACEPOD BODY
MAKE FROM D3188-1M

RELEASED
2009 -10- 20

NOTES:
1) REFERENCE DIMENSIONS REPRESENT HOLES WHICH ARE TRANSFER DRILLED FROM D3186-3 DOOR DURING ASSEMBLY
2) SEE SHEET #11 FOR SECTION VIEWS

DESIGN	JB	**DART AEROSPACE LTD** HAWKESBURY, ONTARIO, CANADA
DRAWN	RF	
CHECKED		DRAWING NO. REV. F
MFG. APPR.		D3188 SHEET 5 OF 11
APPROVED		TITLE SCALE
DE APPR.		SPACEPOD BODY NTS
DATE	09.07.13	

COPYRIGHT © 2003 BY DART AEROSPACE LTD
THIS DOCUMENT IS PRIVATE AND CONFIDENTIAL AND IS SUPPLIED ON THE EXPRESS CONDITION THAT IT IS NOT TO BE USED FOR ANY PURPOSE OR COPIED OR COMMUNICATED TO ANY OTHER PERSON WITHOUT WRITTEN PERMISSION FROM DART AEROSPACE LTD.

w/o 66600

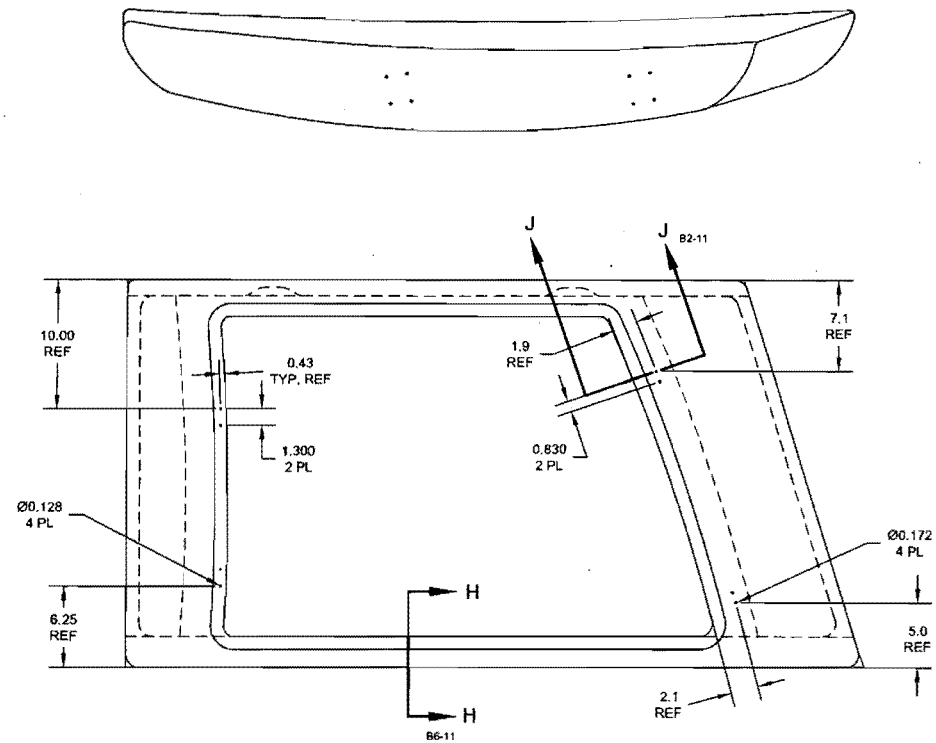

D3188-6 SPACEPOD BODY
MAKE FROM D3188-2M

RELEASED
2009 -10- 20

NOTES:
1) REFERENCE DIMENSIONS REPRESENT HOLES WHICH ARE TRANSFER DRILLED FROM D3186-4 DOOR DURING ASSEMBLY
2) SEE SHEET #11 FOR SECTION VIEWS

DESIGN	JB	DART AEROSPACE LTD HAWKESBURY, ONTARIO, CANADA
DRAWN	RF	
CHECKED		DRAWING NO. REV. F
MFG. APPR.		D3188 SHEET 6 OF 11
APPROVED		TITLE SCALE
DE APPR.		SPACEPOD BODY NTS
DATE	09.07.13	

COPYRIGHT © 2003 BY DART AEROSPACE LTD
THIS DOCUMENT IS PRIVATE AND CONFIDENTIAL AND IS SUPPLIED ON THE EXPRESS CONDITION THAT IT IS NOT TO BE USED FOR ANY PURPOSE OR COPIED OR COMMUNICATED TO ANY OTHER PERSON WITHOUT WRITTEN PERMISSION FROM DART AEROSPACE LTD.

w/o 66600

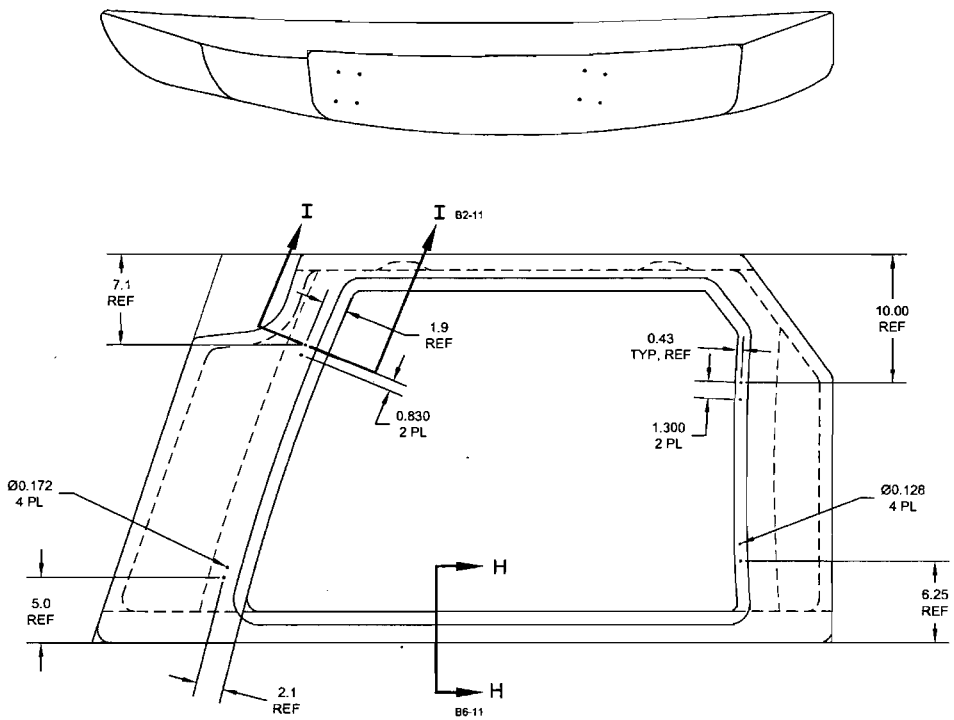

D3188-7 SPACEPOD BODY
MAKE FROM D3188-3M

RELEASED
2009 -10- 20

NOTE:
1) REFERENCE DIMENSIONS REPRESENT HOLES WHICH ARE TRANSFER DRILLED FROM D3186-3 DOOR DURING ASSEMBLY
2) SEE SHEET #11 FOR SECTION VIEWS

DESIGN	JB	**DART AEROSPACE LTD** HAWKESBURY, ONTARIO, CANADA
DRAWN	RF	
CHECKED		DRAWING NO. REV. F
MFG. APPR.		D3188 SHEET 7 OF 11
APPROVED		TITLE SCALE
DE APPR.		SPACEPOD BODY NTS
DATE	09.07.13	

COPYRIGHT © 2003 BY DART AEROSPACE LTD
THIS DOCUMENT IS PRIVATE AND CONFIDENTIAL AND IS SUPPLIED ON THE EXPRESS CONDITION THAT IT IS NOT TO BE USED FOR ANY PURPOSE OR COPIED OR COMMUNICATED TO ANY OTHER PERSON WITHOUT WRITTEN PERMISSION FROM DART AEROSPACE LTD.

S/O 66600

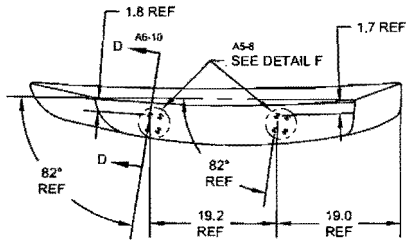

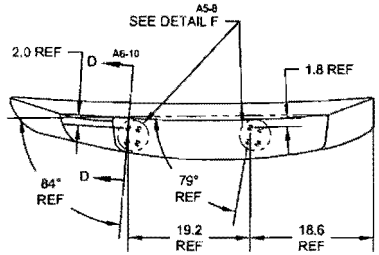

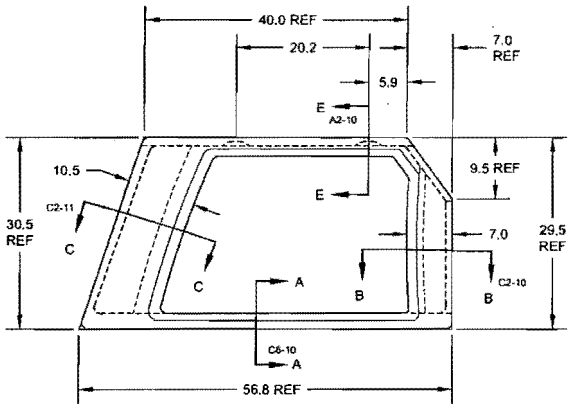

D3188-1M SPACEPOD BODY

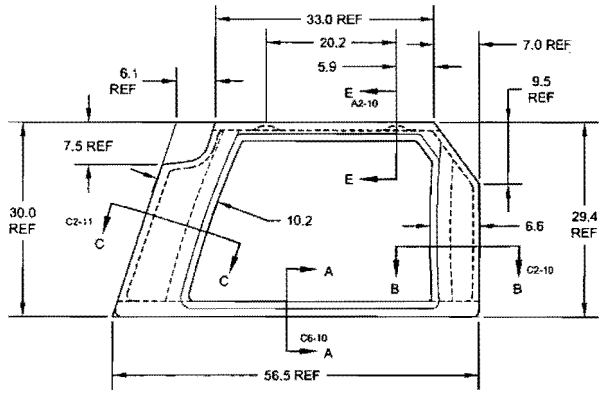

D3188-3M SPACEPOD BODY

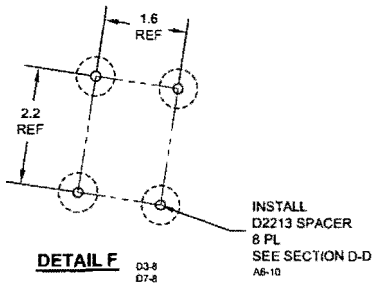

DETAIL F D3-8 D7-8

RELEASED
2009 -10- 23

D3186-1M/-3M NOTES:
1) REFERENCE DIMENSIONS ARE FROM DT8003/DT8500 AND DT8501.
2) SEE SHEET #10 FOR SECTION VIEWS.

DESIGN	JB	**DART AEROSPACE LTD** HAWKESBURY, ONTARIO, CANADA
DRAWN	RF	
CHECKED		DRAWING NO. REV. F
MFG. APPR.		D3188 SHEET 8 OF 11
APPROVED		TITLE SCALE
DE APPR.		SPACEPOD BODY NTS
DATE	09.07.13	

COPYRIGHT © 2003 BY DART AEROSPACE LTD
THIS DOCUMENT IS PRIVATE AND CONFIDENTIAL AND IS SUPPLIED ON THE EXPRESS CONDITION THAT IT IS NOT TO BE USED FOR ANY PURPOSE OR COPIED OR COMMUNICATED TO ANY OTHER PERSON WITHOUT WRITTEN PERMISSION FROM DART AEROSPACE LTD.

W/O 666 00

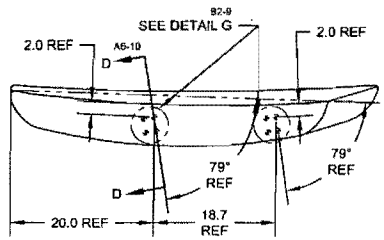

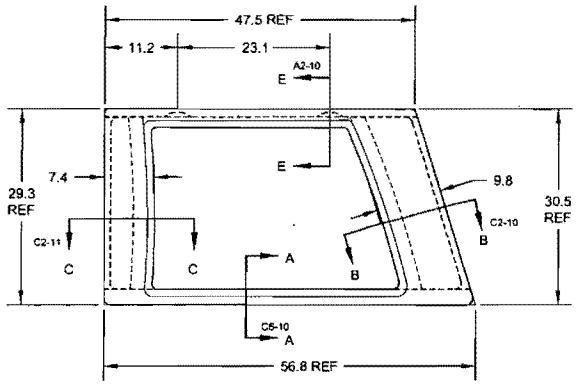

D3188-2M SPACEPOD BODY

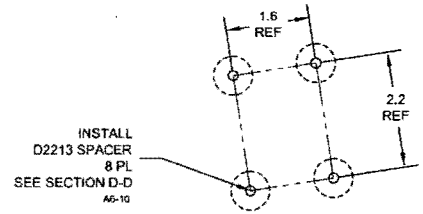

DETAIL G D6-9

RELEASED
2009 -10- 20

D3186-2M NOTES:
1) REFERENCE DIMENSIONS ARE FROM DT8004 AND DT8502.
2) SEE SHEET #10 FOR SECTION VIEWS.

DESIGN	JB	**DART AEROSPACE LTD** HAWKESBURY, ONTARIO, CANADA
DRAWN	RF	
CHECKED		DRAWING NO. REV. F
MFG. APPR.		D3188 SHEET 9 OF 11
APPROVED		TITLE SCALE
DE APPR.		SPACEPOD BODY NTS
DATE	09.07.13	

COPYRIGHT © 2003 BY DART AEROSPACE LTD
THIS DOCUMENT IS PRIVATE AND CONFIDENTIAL AND IS SUPPLIED ON THE EXPRESS CONDITION THAT IT IS NOT TO BE USED FOR ANY PURPOSE OR COPIED OR COMMUNICATED TO ANY OTHER PERSON WITHOUT WRITTEN PERMISSION FROM DART AEROSPACE LTD.

W/O 66600

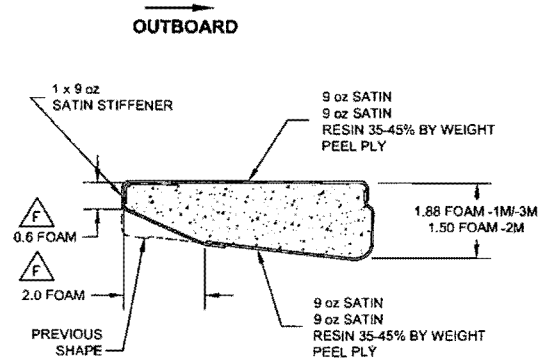

F **SECTION A-A** B7-8 B3-8 B6-9
TYPICAL FLOOR SECTION

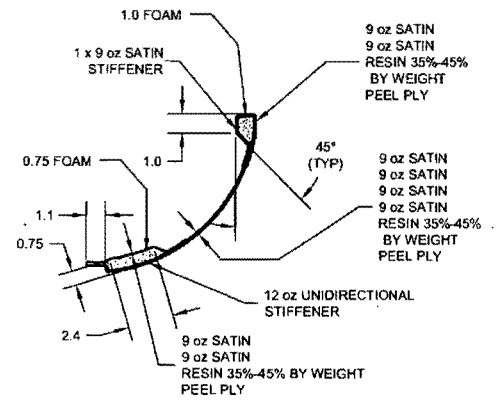

SECTION B-B B6-8 B8-8 B4-8 B2-8 B7-9 B5-9
SECTION C-C OPPOSITE

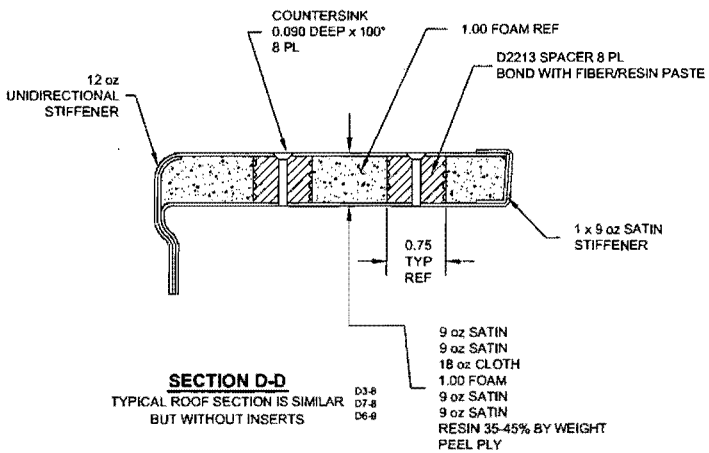

SECTION D-D D3-8 D7-8 D6-9
TYPICAL ROOF SECTION IS SIMILAR BUT WITHOUT INSERTS

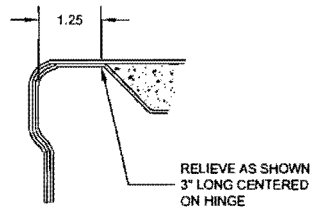

SECTION E-E C2-8 C7-8 B6-9
2 PLACES PER POD

RELEASED
2009 -10- 2 1

DESIGN	JB	**DART AEROSPACE LTD** HAWKESBURY, ONTARIO, CANADA
DRAWN	RF	
CHECKED		DRAWING NO. REV. F
MFG. APPR.		D3188 SHEET 10 OF 11
APPROVED		TITLE SCALE
DE APPR.		SPACEPOD BODY NTS
DATE	09.07.13	

COPYRIGHT © 2003 BY DART AEROSPACE LTD
THIS DOCUMENT IS PRIVATE AND CONFIDENTIAL AND IS SUPPLIED ON THE EXPRESS CONDITION THAT IT IS NOT TO BE USED FOR ANY PURPOSE OR COPIED OR COMMUNICATED TO ANY OTHER PERSON WITHOUT WRITTEN PERMISSION FROM DART AEROSPACE LTD.

w/o 66600

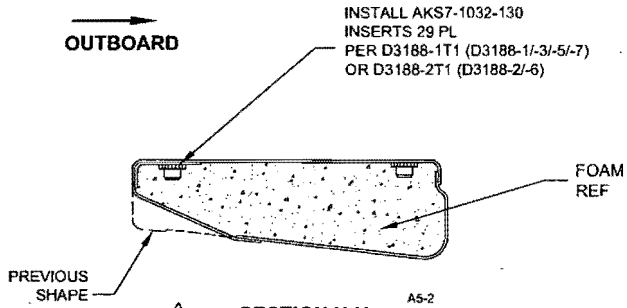

F **SECTION H-H**
TYPICAL FLOOR SECTION

A5-2
A5-3
A5-4
A5-5
B5-6
B5-7

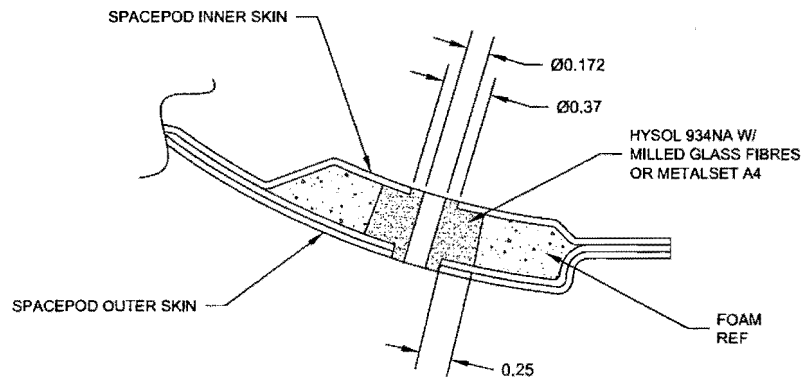

SECTION I-I
SECTION J-J OPPOSITE
4 PLACES PER POD

C5-5
C4-6
C5-7

RELEASED
2009 -10- 20

DESIGN	JB	**DART AEROSPACE LTD** HAWKESBURY, ONTARIO, CANADA
DRAWN	RF	
CHECKED		DRAWING NO. REV. F
MFG. APPR.		D3188 SHEET 11 OF 11
APPROVED		TITLE SCALE
DE APPR.		SPACEPOD BODY NTS
DATE	09.07.13	

COPYRIGHT © 2003 BY DART AEROSPACE LTD
THIS DOCUMENT IS PRIVATE AND CONFIDENTIAL, AND IS SUPPLIED ON THE EXPRESS CONDITION THAT IT IS NOT TO BE USED FOR ANY PURPOSE OR COPIED OR COMMUNICATED TO ANY OTHER PERSON WITHOUT WRITTEN PERMISSION FROM DART AEROSPACE LTD.